ERCO GmbH
Postfach 2460
58505 Lüdenscheid
Brockhauser Weg 80-82
58507 Lüdenscheid
Germany

Tel.: +49 2351 551 0
info@erco.com
www.erco.com

Notes and safety instructions

Luminaires for ERCO Minirail 48V

3000059673
0925

English

Follow all enclosed instructions during installation.

Read the instructions carefully before installation and commissioning!

Leave the instructions for users/customers for future reference!

General safety information

Warning!
Risk of electric shock!

– Before installation always make sure that the 48V power supply is switched off.
- The luminaire is only approved for mounting in ERCO Minirail 48V track systems. Never operate the luminaire with a higher voltage.
The power supply must always be SELV (safety class III).
- If ERCO adapters are used with products manufactured by third parties, no liability can be accepted for the electrical safety and functionality of the combined system or for consequential damage resulting from the combination. The liability for defective ERCO adapters remains unaffected.

Caution!
Blue light hazard!

RG2

Position the luminaire marked with one of two adjacent pictograms so that extended gazing into the luminaire from a distance of less than xm is not expected. Find the value for x in the included graphic installation instructions.

Caution!
Risk of burns!

Luminaire with this pictogram in the attached graphic mounting instructions may reach surface temperatures of more than 60° and cause skin burns. This luminaire must be installed outside of the hand area.

Attention!
- The LED module and control gear of this luminaire may only be replaced or repaired by the manufacturer. In case of damage or failure of the LED module or control gear, the complete luminaire must be sent back to the factory.
- When installing, always observe the national installation and accident prevention regulations.

Overvoltage protection

ERCO uses electronic control gear with overvoltage protection in accordance with DIN EN 61547. If additional protection from spikes is required, e.g. when switching off inductive loads, separate overvoltage protection units should be installed.

Intended use

The luminaire is suitable for use in dry interiors only.

Restrictions

Wall mounting
When mounting in horizontally or vertically mounted track, the maximum weights (including accessories) specified in the drawings must not be exceeded.

Choosing the mounting location

Position the luminaire so as to avoid operation in direct sunlight or near other sources of heat. High ambient temperatures can reduce the life and efficiency of the control gear or LED module.

Alignment of the luminaire in the track

You can insert the luminaire into the track in any direction.

Luminaires with on-board dim function

With the Add-on control unit, the luminous flux can be infinitely dimmed.

Luminaires with radio control

- Depending on the version, these luminaires can be controlled via Casambi Bluetooth or Zigbee.
- ERCO GmbH hereby declares that the track luminaires with Casambi Bluetooth or Zigbee control are compliant with Directive 2014/53/EU and the UK SI 2017 No. 1206 - The Radio Equipment Regulations 2017.
Radio operation takes place on the frequency bands 2402 - 2480 MHz (Casambi Bluetooth, Zigbee) with a maximum transmission power of 4/8 dBm (Casambi Bluetooth) or 10 dBm (Zigbee).
The complete text of the certificates is available at the following internet address:
www.erco.com/article number

Luminaires with Casambi Bluetooth
- For control of the luminaire you need a Bluetooth 4.0-capable smartphone or tablet and the Casambi app for iOS or Android downloadable for free in the specific app stores.
- Because the switching signal in a mesh network is transferred from luminaire to luminaire, the spacing between two luminaires must not exceed 10m. This distance may be less according to the environment. For this reason you should check possible spacing between the luminaires prior to installation.
- Information on the features, commissioning, programming and operation of a Casambi network is available at: https://support.casambi.com/support/home
We will be pleased to support you with your project. Please do not hesitate to contact us.

Operation with DALI
Using the DALI-Casambi Gateway accessory, a luminaire with Casambi Bluetooth can also be controlled via DALI.

Luminaires with Zigbee
Precondition: Zigbee 3.0 suitable hub available.
- It is recommended to always check the combination of Zigbee devices and luminaires.
- Provided that mains voltage is permanently present, the luminaires in the Zigbee mesh network can be used as routers.
- Several networks can be set up in parallel.
- Basic information on Zigbee networks is available at: https://csa-iot.org/all-solutions/zigbee/zigbee-faq/
For specific questions on commissioning and programming, please contact the manufacturer of your Zigbee control system.
We will be pleased to support you with your project. Please do not hesitate to contact us.

Initial installation of luminaire with Zigbee
1. Activate network and open it at the gateway via the software.
2. Insert luminaire in track and switch on power supply on the luminaire.
- Luminaire automatically connects to the network and acknowledges this by flashing once.
Note: Networks remain open for only a few minutes, repeat the opening procedure if necessary. Further information can be found here:
www.erco.com/zigbee

Removing luminaire with Zigbee from an existing network
If a luminaire is to be stored or used in another network, log it off from the current network before removing. For this purpose use a command in the current network, e.g. "Delete luminaire".
If you have not logged off the luminaire you must reset it before further use. For information about this see:
www.erco.com/zigbee

Luminaires with RGBW / tunable white

Control via Casambi Bluetooth, Zigbee or DALI. A DALI system with colour management (device type 8) is required for control via DALI.

Rotate light distribution

Caution!
Danger from falling parts!

When adjusting, turn the lens clockwise only. Turning anticlockwise releases the lens from the luminaire!

Luminaires with wallwash
By rotating the luminaires, walls or objects on both sides of the luminaire can be illuminated. Note that the lens must always be aligned as shown in the graphic mounting instructions for this purpose. You can correct this by turning the lens clockwise. The markings on the hinge refer to the optimum 35° position.

Contour spotlights

For sharp edges you can fit the included aperture.

Fit / replace add-on control unit

- Take note of accessory instructions!
- Only use accessories assigned to the luminaire (see product data sheet).
- Luminaires with Casambi Bluetooth or Zigbee: if the add-on control unit is removed and the luminaires are switched off, any previous settings are lost!

Disassembly
Carefully release the add-on control unit or the cover from the luminaire.

Installation
Position the add-on control unit so that the snap-in hooks are above the openings provided for this purpose and then snap into place.

Cleaning

For cleaning purposes use only a high-quality microfibre knitted cleaning cloth suitable for optical precision systems, e.g. Microweb UD-G.

Disposal

In accordance with EU Directive WEEE (Waste Electrical and Electronic Equipment), luminaires must not be disposed of with other household waste. At the end of their life, luminaires must be taken to the appropriate local facility available for the disposal or recycling of electronic products.

ERCO

ERCO GmbH
Postfach 2460
58505 Lüdenscheid
Brockhauser Weg 80-82
58507 Lüdenscheid
Germany

Tel.: +49 2351 551 0
info@erco.com
www.erco.com

Parscan 48V

Mounting instructions

3000060613
1025

General safety information

CAUTION Only for use with ERCO Minirail 48V tracks in combination with control gears released by ERCO!

Indoor use only!

See manual!

General safety information

CAUTION

x=min

Size	XS	S	M
Narrow spot	1.6m	1.4m	1.5m
Spot	0.5m	0.5m	0.5m
Flood	0.3m	0.3m	0.3m

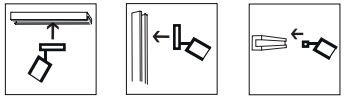

Size			
XS, S	max. 1.7kg*	max. 0.8kg*	max. 1.2kg*
M	max. 1.7kg*	✘	max. 1.2kg

* incl. accessories

CAUTION

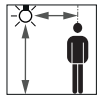

min. 1.50m

min. 2.50m

Only size M

Mounting in the track

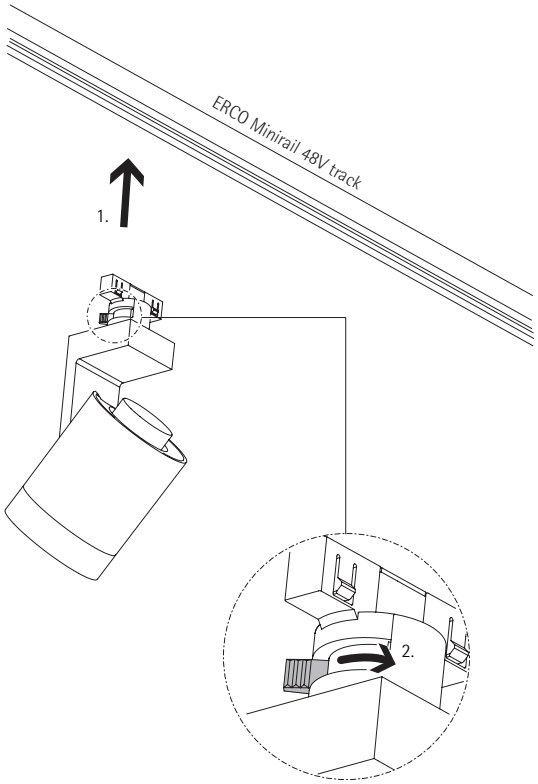

On-board Dim
Casambi Bluetooth
Zigbee 3.0

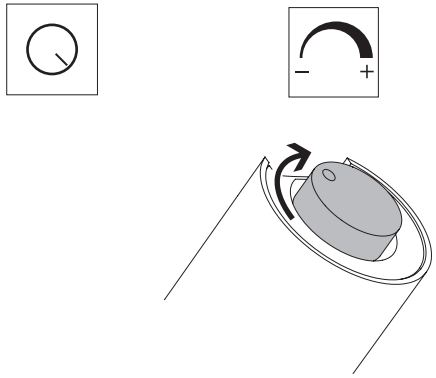

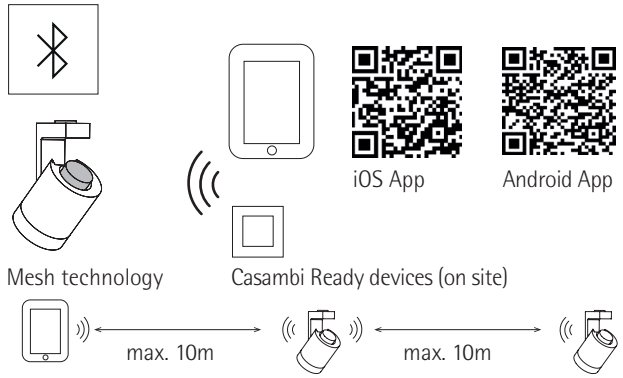

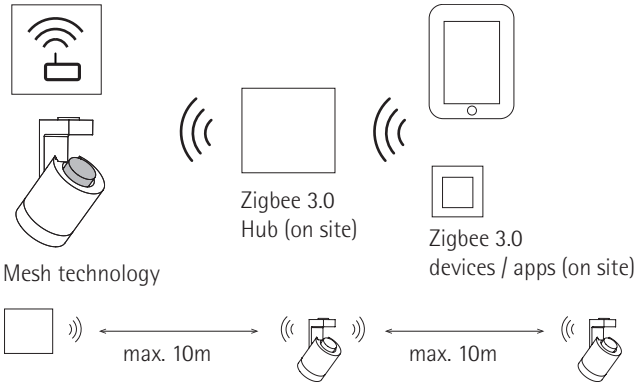

Rotate light distribution

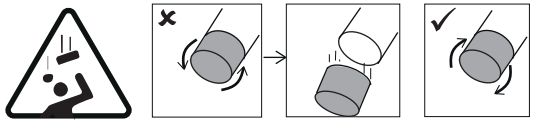

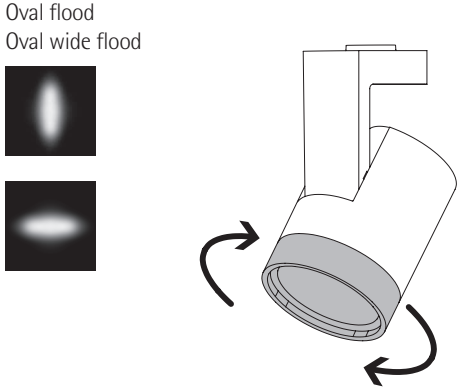

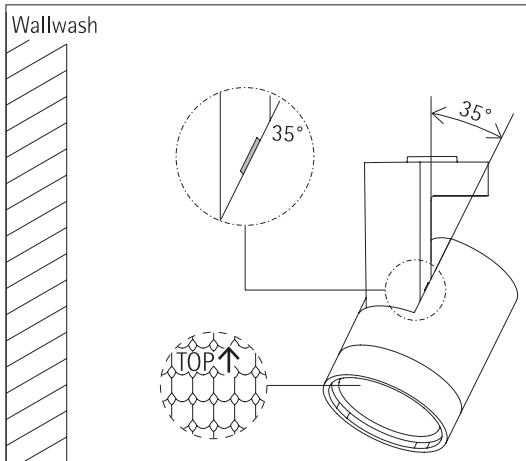

Rotate light distribution

Zoom oval

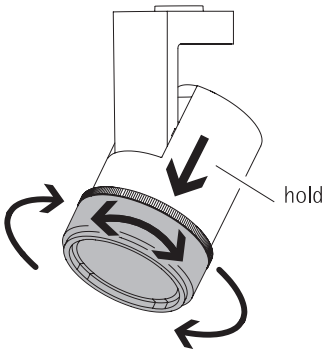

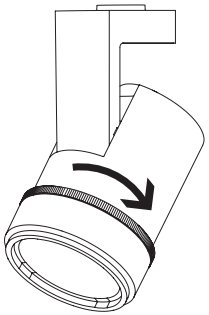

Zoom spot

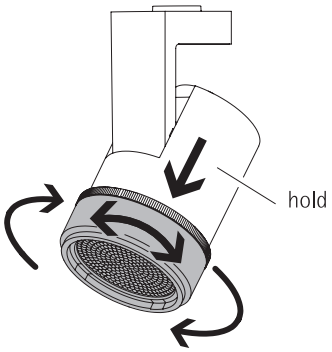

Contour spotlight

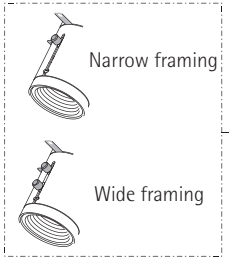

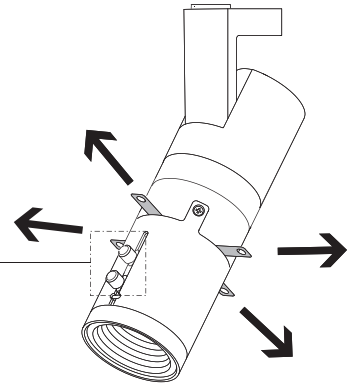

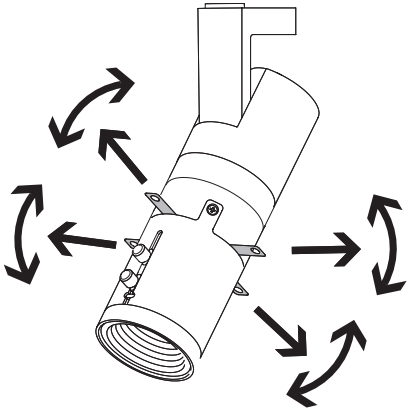

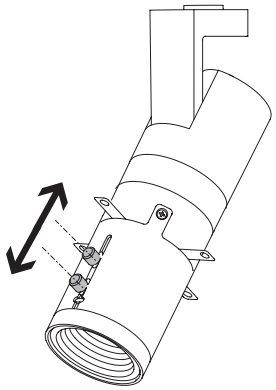

Contour spotlight

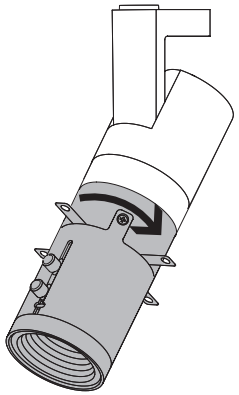

Optional

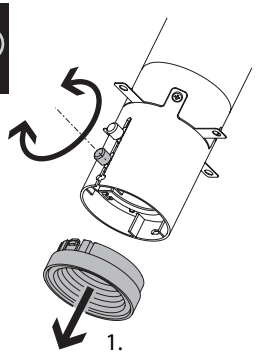

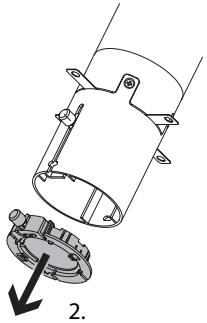

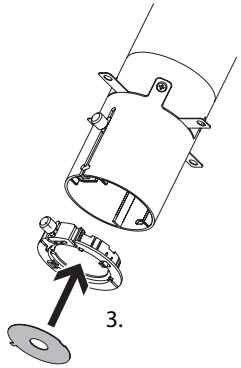

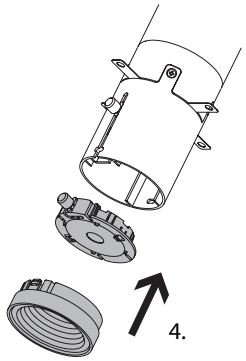

Removal from the track

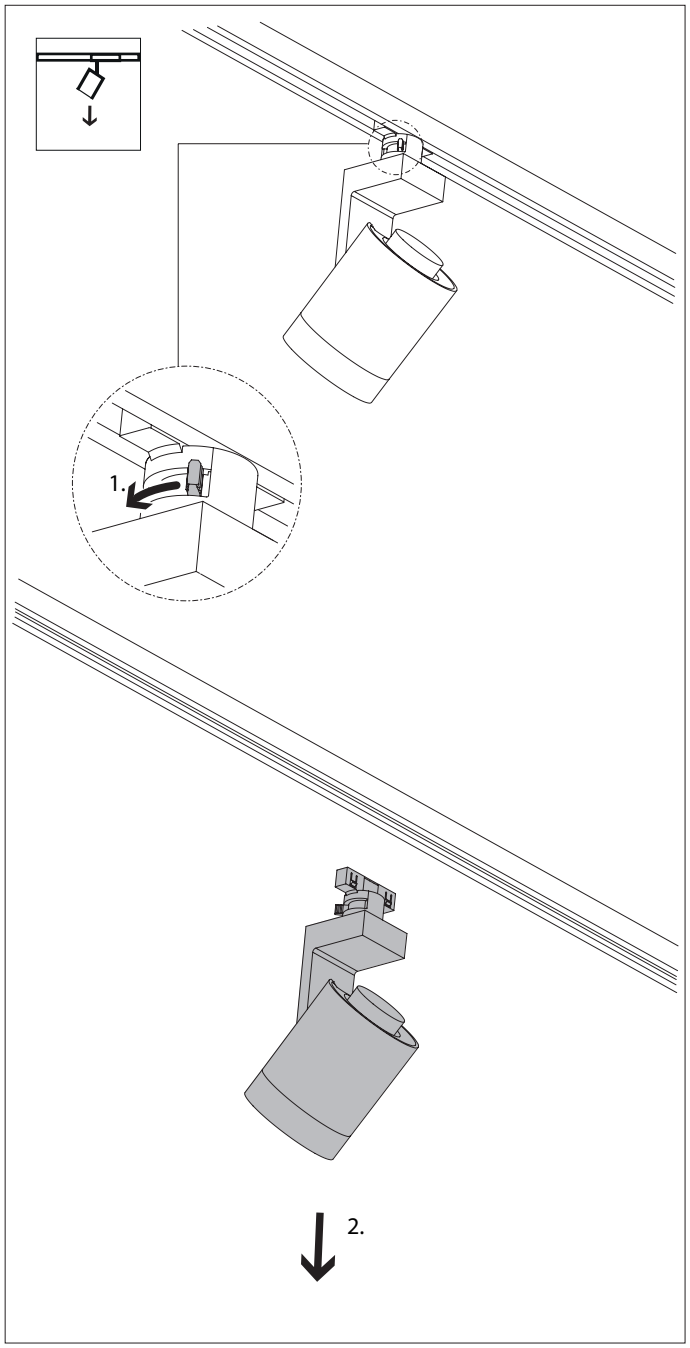

Accessories

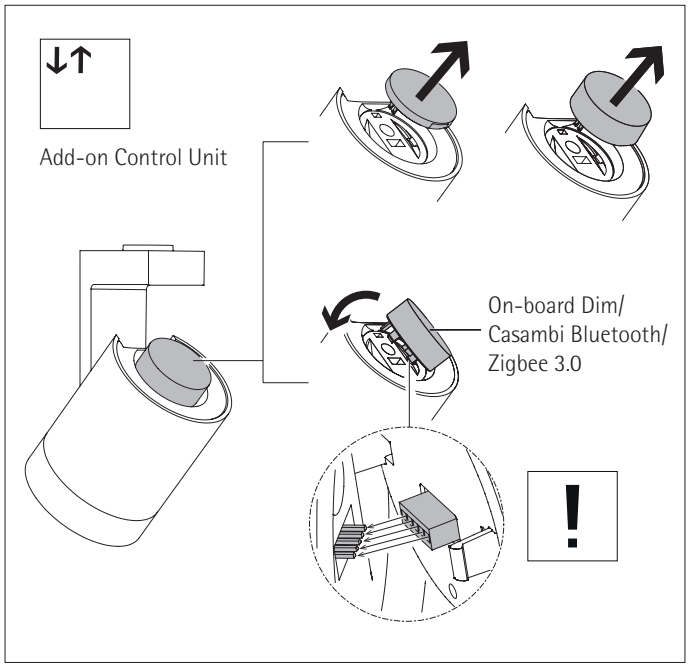

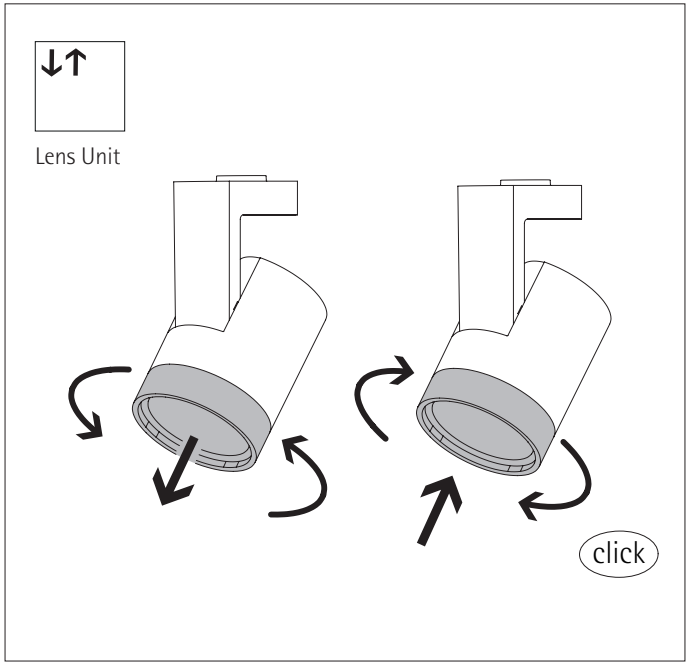

Accessories

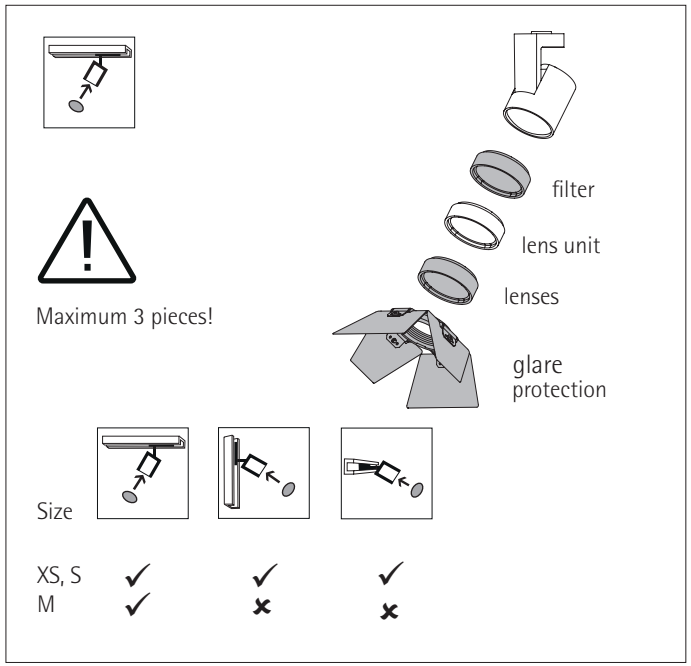

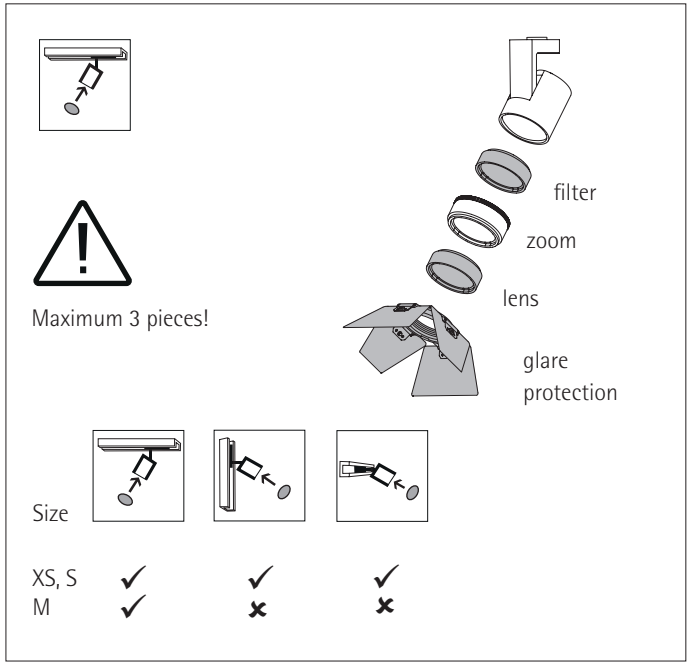

Accessories

Size S

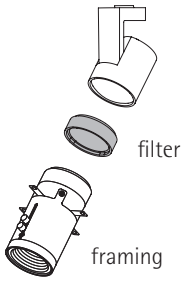

Maximum 1 filter!

Size			
S	✓	✓	✓

Size M

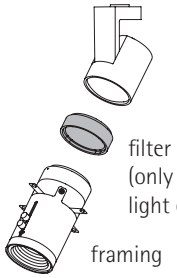

Fixed light colour: Maximum 1 filter!
Tunable white/RGBW: No filter!

Size			
M	✓	✗	✗

Accessories

Accessories

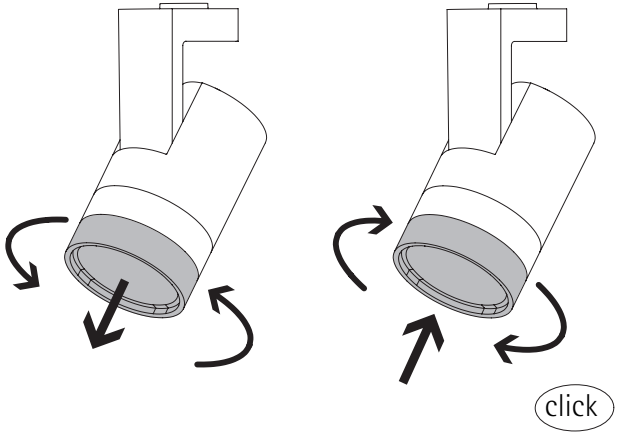

English

Follow all enclosed instructions during installation.

ERCO

ERCO GmbH
Postfach 2460
58505 Lüdenscheid
Brockhauser Weg 80-82
58507 Lüdenscheid
Germany

Tel.: +49 2351 551 0
Fax: +49 2351 551 300
info@erco.com
www.erco.com

Effizienzklasse Lichtquelle
Efficiency class light source
Classe d'efficacité énergétique de la source lumineuse
Efficiëntieklasse lichtbron
Classe di efficienza della sorgente luminosa
Clase de eficiencia de la fuente de luz
Ljuskällans energiklass
Energiklasse lyskilde
Energieffektivitetsklasse for lyskilden

Deutsch

Dieses Produkt enthält eine Lichtquelle der Effizienzklasse D.
Aus wärmetechnischen und lichttechnischen Gründen sowie dem Schutz elektronischer Bauteile vor ESD (Electro Static Discharge) kann die Lichtquelle nicht vom Kunden gewechselt werden.

English

This product contains a light source of efficiency class D.
Due to thermal and photometric properties as well as to protect electronic components from ESD (electrostatic discharge) the light source cannot be changed by the customer.

Français

Ce produit comprend une source lumineuse de classe d'efficacité énergétique D.
Pour des raisons techniques liées à la chaleur et à l'éclairage, ainsi que pour protéger les composants électroniques contre la décharge électrostatique (DES), la source lumineuse ne peut pas être remplacée par le client.

Nederlands

Dit product bevat een lichtbron van efficiëntieklasse D.
Om warmtetechnische en lichttechnische redenen almede de bescherming van elektronische componenten tegen ESD (elektrostatische ontlading) kan de lichtbron niet door de klant worden gewisseld.

Italiano

Questo prodotto contiene una sorgente luminosa con classe di efficienza D.
Per ragioni tecniche di temperatura e illuminazione e la protezione dei componenti elettrici dall'ESD (Electro-Static Discharge), la sorgente luminosa non deve essere sostituita dal cliente.

Español

Este producto contiene una fuente de luz con clase de eficiencia D.
Por motivos térmicos y luminotécnicos, así como para proteger los componentes electrónicos contra descargas electrostáticas (ESD), no se permite al cliente cambiar la fuente de luz.

Svenska

Denna produkt innehåller en ljuskälla i energiklass D.
Av värme- och ljustekniska skäl samt avseende skyddet av elektroniska komponenter mot elektrostatiska urladdningar (ESD) kan ljuskällan inte bytas av kunden.

Norsk

Dette produktet inneholder en lyskilde i energiklasse D.
Av varme- og lystekniske årsaker samt for å beskytte de elektroniske komponentene mot ESD (Electro Static Discharge), er det ikke mulig for kunden å skifte lyskilde.

Dansk

Dette produkt indeholder en lyskilde i energieffektivitetsklasse D.
Af varmetekniske og lystekniske samt for at beskytte de elektroniske komponenter mod ESD (electrostatic discharge/statiske udledninger) kan kunden ikke selv udskifte lyskilden.

3000064231
0222