ERCO GmbH
Postfach 2460
58505 Lüdenscheid
Brockhauser Weg 80-82
58507 Lüdenscheid
Germany

Tel.: +49 2351 551 0
info@erco.com
www.erco.com

# Notes and safety instructions

## Luminaires for ERCO track

3000054936
1125

## English

- The following safety instructions and information apply to luminaires with 3-circuit adapter, DALI adapter, transadapter and DALI transadapter.
- Follow all enclosed instructions during installation.

Read the instructions carefully before installation and commissioning!

Leave the instructions for users/customers for future reference!

### General safety information

*Warning!*
*Risk of electric shock!*

- Before carrying out maintenance and installation on the luminaire, disconnect from the mains supply and also from any other DALI control wiring, and ensure that all power is switched off.
- The luminaire is approved for mounting in ERCO track only.
- If ERCO adapters are used with products manufactured by third parties, no liability can be accepted for the electrical safety and functionality of the combined system or for consequential damage resulting from the combination. The liability for defective ERCO adapters remains unaffected.

*Caution!*
*Blue light hazard!*

RG2

Position the luminaire marked with one of two adjacent pictograms so that extended gazing into the luminaire from a distance of less than xm is not expected. Find the value for x in the included graphic installation instructions.

*Caution!*
*Risk of fire!*

This sign on the luminaire symbolises the safety distance between luminaire and directly illuminated object in beam direction. Failure to keep this safety distance may damage the object or cause fire.

*Caution!*
*Risk of burns!*

Luminaire with this pictogram in the attached graphic mounting instructions may reach surface temperatures of more than 60° and cause skin burns. This luminaire must be installed outside of the hand area.

*Attention!*

- The LED module and control gear of this luminaire may only be replaced or repaired by the manufacturer. In case of damage or failure of the LED module or control gear, the complete luminaire must be sent back to the factory.
- Never operate luminaires with damaged connection cables. The connection cable may only be replaced by the manufacturer.
- When installing, always observe the national installation and accident prevention regulations.

### Intended use

The luminaire is suitable for use in dry interiors only.

### Restrictions

Luminaires with transadapters or DALI transadapters may not be installed in singlets.

*Wall-mounting*

If track is mounted horizontally, only luminaires weighing up to a maximum of 2kg may be used.
If vertically mounted, the guiding groove on the track profile must be facing to the right. Only use luminaires weighing up to a maximum of 3.5kg.
For deviating restrictions, please refer to the enclosed graphic mounting instructions.

### Choosing the mounting location

Position the luminaire so as to avoid operation in direct sunlight or near other sources of heat. High ambient temperatures can reduce the life and efficiency of the control gear or LED module.

### Luminaires with radio control

Depending on the version, these luminaires can be controlled via Casambi Bluetooth or Zigbee.
- ERCO GmbH hereby declares that the track luminaires with Casambi Bluetooth or Zigbee control are compliant with Directive 2014/53/EU and the UK SI 2017 No. 1206 - The Radio Equipment Regulations 2017.
Radio operation takes place on the frequency bands 2402 - 2480 MHz (Casambi Bluetooth, Zigbee) with a maximum transmission power of 4/8 dBm (Casambi Bluetooth) or 10 dBm (Zigbee).
The complete text of the certificates is available at the following internet address: www.erco.com/article number

*Luminaires with Casambi Bluetooth*

- For control of the luminaire you need a Bluetooth 4.0-capable smartphone or tablet and the Casambi app for iOS or Android downloadable for free in the specific app stores.
- Because the switching signal in a mesh network is transferred from luminaire to luminaire, the spacing between two luminaires must not exceed 10m. This distance may be less according to the environment. For this reason you should check possible spacing between the luminaires prior to installation.
- Information on the features, commissioning, programming and operation of a Casambi network is available at: https://support.casambi.com/support/home
We will be pleased to support you with your project. Please do not hesitate to contact us.

*Luminaires with Zigbee*

Precondition: Zigbee 3.0 suitable hub available.
- It is recommended to always check the combination of Zigbee devices and luminaires.
- Provided that mains voltage is permanently present, the luminaires in the Zigbee Mesh network can be used as routers.
- Several networks can be set up in parallel.
- Basic information on Zigbee networks is available at: https://csa-iot.org/all-solutions/zigbee/zigbee-faq/
For specific questions on commissioning and programming, please contact the manufacturer of your Zigbee control system.
We will be pleased to support you with your project. Please do not hesitate to contact us.

*Initial installation of luminaire with Zigbee*

1. Activate network and open it at the gateway via the software.
2. Insert luminaire in track and switch on power supply on the luminaire.
- The luminaire automatically connects to the network.
Note: networks remain open for only a few minutes, repeat the entire connection process if necessary. Further information can be found here: www.erco.com/zigbee

*Removing luminaire with Zigbee from an existing network*

If a luminaire is to be stored or used in another network, log it off from the current network before removing. For this purpose use a command in the current network, e.g. "Delete luminaire".
If you have not logged off the luminaire you must reset it before further use. For information about this see: www.erco.com/zigbee

### Luminaires with DALI

The DALI control lines and mains cable are basic insulated from each other. Maintaining the designated insulation barriers of the luminaire or device may also depend on components/products externally connected to the control bus. This is the responsibility of the control system designer and not the luminaire or device manufacturer.

### Luminaires with RGBW / tunable white

Control via Casambi Bluetooth, Zigbee or DALI. A DALI system with colour management (device type 8) is required for control via DALI.
Colour compensation ensures the same light colour for all controlled luminaires with the same control values.

### Electrical installation

For 3-circuit installation: to avoid any damage to the control gear, the neutral conductor must never be connected or disconnected during operation.

*Overvoltage protection*

ERCO uses electronic control gear with overvoltage protection in accordance with DIN EN 61547. If additional protection from spikes is required, e.g. when switching off inductive loads, separate overvoltage protection units should be installed.

### Dimming

Depending on the version, the luminaire can be dimmed via suitable dimmers (trailing edge).

*Trailing edge dimmers*

Follow the manufacturer's installation instructions.
For some products, the luminaire can only be switched on in the upper dimming range. Before installation and connection, check luminaire, control gear and dimmer combination for proper functioning of the dimmer, especially when using universal dimmers.
The use of dimmers which are unsuitable for LED drivers can damage the luminaire, control gear and/or the dimmer. No responsibility is accepted for the use of dimmers that are unsuitable for the luminaire.

*On-board Dim (potentiometer)*

The luminous flux can be continuously dimmed with the rotary control on the luminaire, and (depending on the version) also with a trailing edge dimmer.

### Rotate light distribution

*Caution!*
*Danger from falling parts!*

*Lens Unit*

When adjusting, turn the lens clockwise only. Turning anticlockwise releases the lens from the luminaire!

*Spherolit lens*

When loosening the lens holder make sure the Spherolit lens doesn't fall to the ground!

*Luminaires with wallwash*

By rotating the luminaires, walls or objects on both sides of the luminaire can be illuminated. Note that the lens must always be aligned as shown in the graphic mounting instructions for this purpose.

### Flashing of the LED module

It is normal for the LED module to flicker when switching on and off.

### Cleaning

Always clean carefully using a soft cloth and a commercially available, ph-neutral, alcohol-free, non-abrasive cleaning agent.

### Disposal

In accordance with EU Directive WEEE (Waste Electrical and Electronic Equipment), luminaires must not be disposed of with other household waste. At the end of their life, luminaires must be taken to the appropriate local facility available for the disposal or recycling of electronic products.

ERCO

ERCO GmbH
Postfach 2460
58505 Lüdenscheid
Brockhauser Weg 80-82
58507 Lüdenscheid
Germany

Tel.: +49 2351 551 0
Fax: +49 2351 551 300
info@erco.com
www.erco.com

# Effizienzklasse Lichtquelle
# Efficiency class light source
# Classe d'efficacité énergétique de la source lumineuse
# Efficiëntieklasse lichtbron
# Classe di efficienza della sorgente luminosa
# Clase de eficiencia de la fuente de luz
# Ljuskällans energiklass
# Energiklasse lyskilde
# Energieffektivitetsklasse for lyskilden

## Deutsch

Dieses Produkt enthält eine Lichtquelle der Effizienzklasse D.
Aus wärmetechnischen und lichttechnischen Gründen sowie dem Schutz elektronischer Bauteile vor ESD (Electro Static Discharge) kann die Lichtquelle nicht vom Kunden gewechselt werden.

## English

This product contains a light source of efficiency class D.
Due to thermal and photometric properties as well as to protect electronic components from ESD (electrostatic discharge) the light source cannot be changed by the customer.

## Français

Ce produit comprend une source lumineuse de classe d'efficacité énergétique D.
Pour des raisons techniques liées à la chaleur et à l'éclairage, ainsi que pour protéger les composants électroniques contre la décharge électrostatique (DES), la source lumineuse ne peut pas être remplacée par le client.

## Nederlands

Dit product bevat een lichtbron van efficiëntieklasse D.
Om warmtetechnische en lichttechnische redenen almede de bescherming van elektronische componenten tegen ESD (elektrostatische ontlading) kan de lichtbron niet door de klant worden gewisseld.

## Italiano

Questo prodotto contiene una sorgente luminosa con classe di efficienza D.
Per ragioni tecniche di temperatura e illuminazione e la protezione dei componenti elettrici dall'ESD (Electro-Static Discharge), la sorgente luminosa non deve essere sostituita dal cliente.

## Español

Este producto contiene una fuente de luz con clase de eficiencia D.
Por motivos térmicos y luminotécnicos, así como para proteger los componentes electrónicos contra descargas electrostáticas (ESD), no se permite al cliente cambiar la fuente de luz.

## Svenska

Denna produkt innehåller en ljuskälla i energiklass D.
Av värme- och ljustekniska skäl samt avseende skyddet av elektroniska komponenter mot elektrostatiska urladdningar (ESD) kan ljuskällan inte bytas av kunden.

## Norsk

Dette produktet inneholder en lyskilde i energiklasse D.
Av varme- og lystekniske årsaker samt for å beskytte de elektroniske komponentene mot ESD (Electro Static Discharge), er det ikke mulig for kunden å skifte lyskilde.

## Dansk

Dette produkt indeholder en lyskilde i energieffektivitetsklasse D.
Af varmetekniske og lystekniske samt for at beskytte de elektroniske komponenter mod ESD (electrostatic discharge/statiske udledninger) kan kunden ikke selv udskifte lyskilden.

3000064231
0222

ERCO

ERCO GmbH
Postfach 2460
58505 Lüdenscheid
Brockhauser Weg 80-82
58507 Lüdenscheid
Germany

Tel.: +49 2351 551 0
info@erco.com
www.erco.com

# Parscan OnTrack

Mounting instructions

3000068883
1025

## General safety information

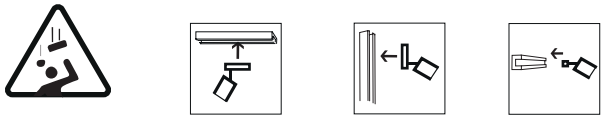

| Size | | | |
|---|---|---|---|
| XS, S, M | max. 1.7kg* | max. 1.7kg* guiding groove right | max. 1.7kg* |

* incl. accessories

**CAUTION**

x=min

| Size | XS | S | M |
|---|---|---|---|
| Narrow spot | 1.6m | 1.4m | 1.5m |
| Spot | 0.5m | 0.5m | 0.5m |
| Flood | 0.3m | 0.3m | 0.3m |

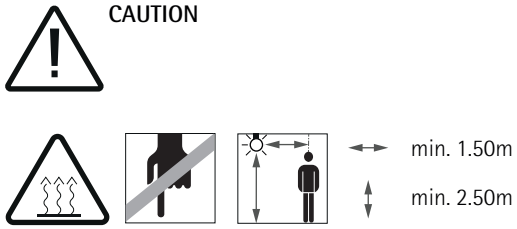


**CAUTION**

Only size M

## Mounting in the track
## On-board Dim, Phase dimmable + On-board Dim
## Casambi Bluetooth

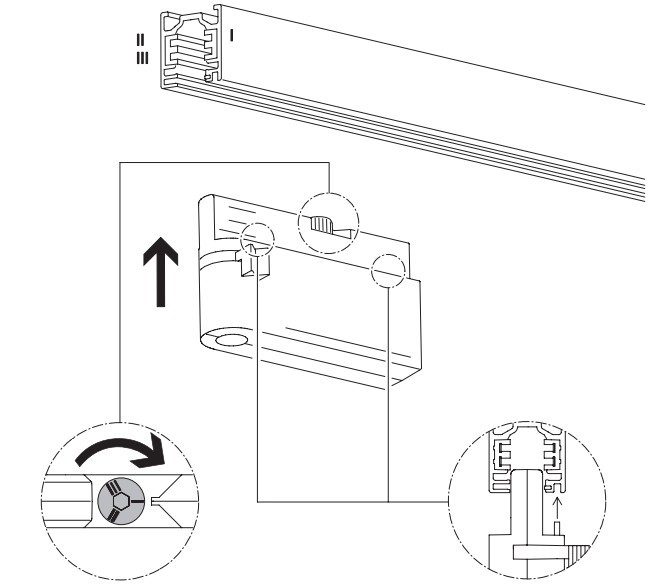

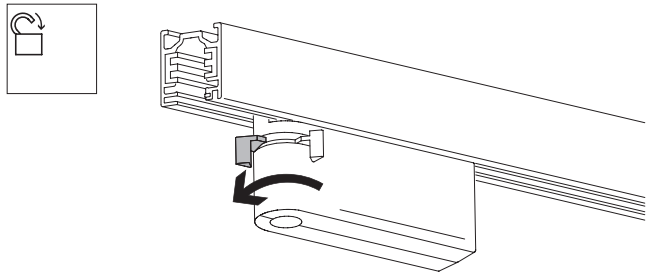

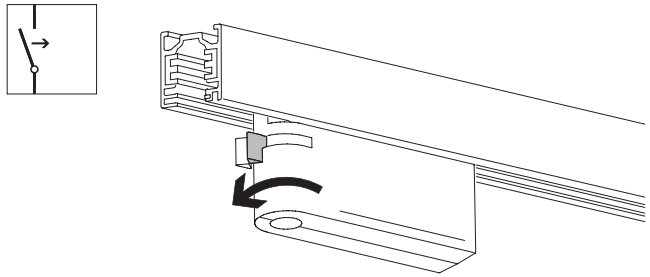

## Mounting in the track
## DALI

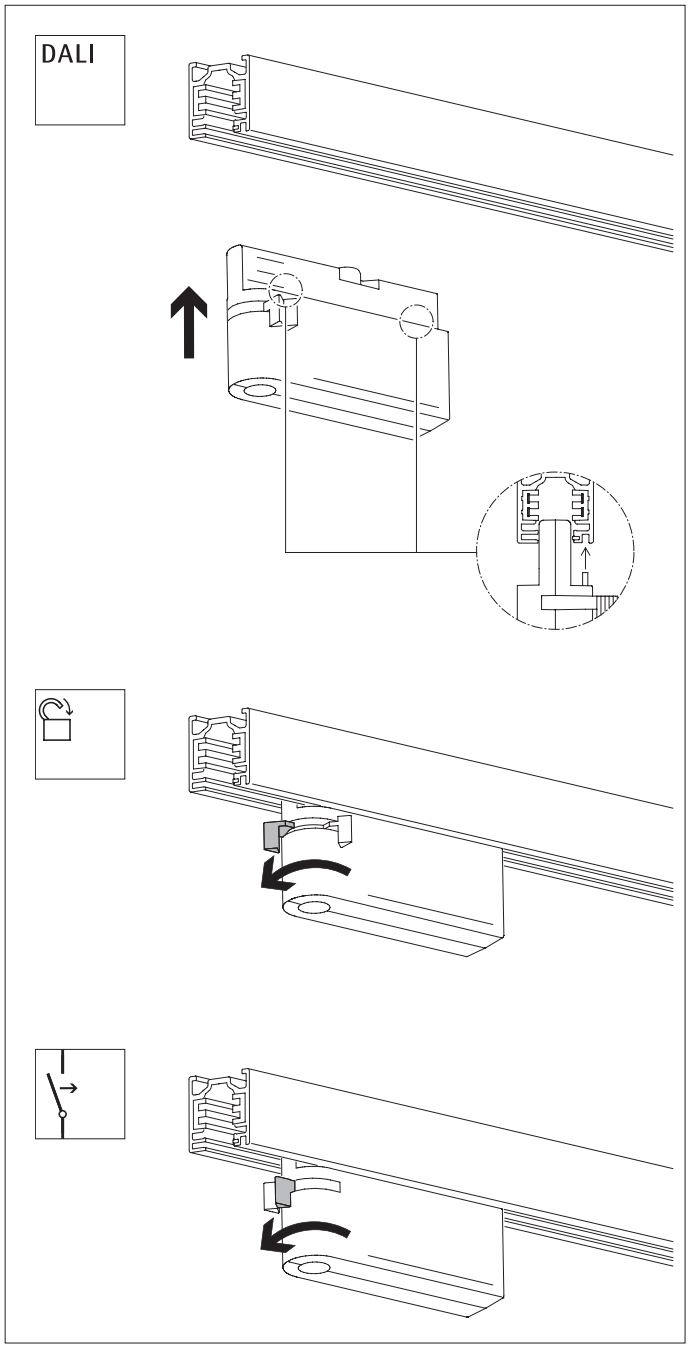


## On-board Dim
## Casambi Bluetooth

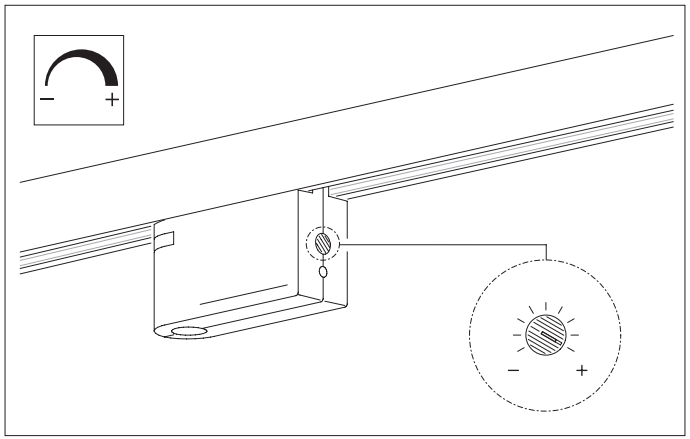

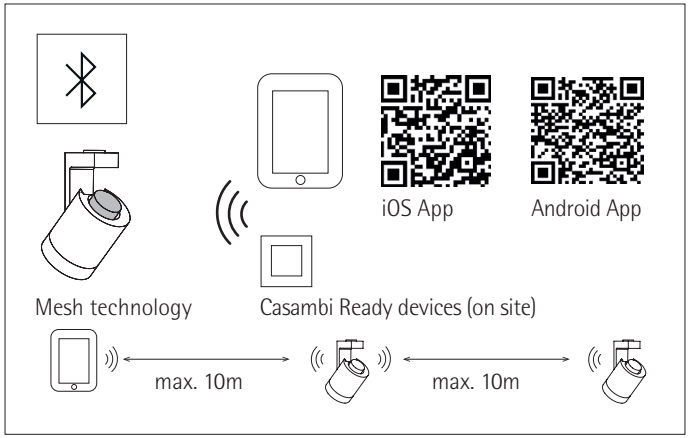


## Rotate light distribution

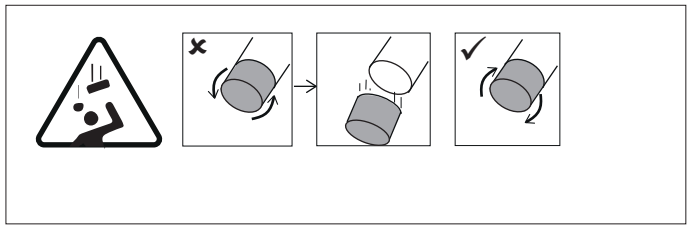

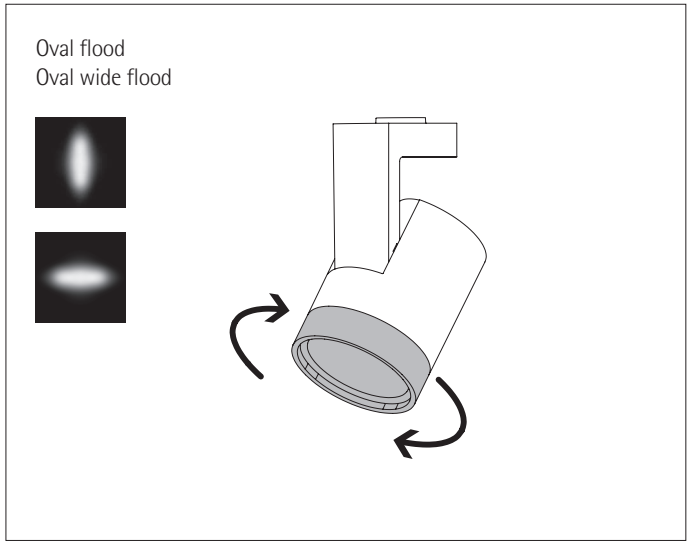


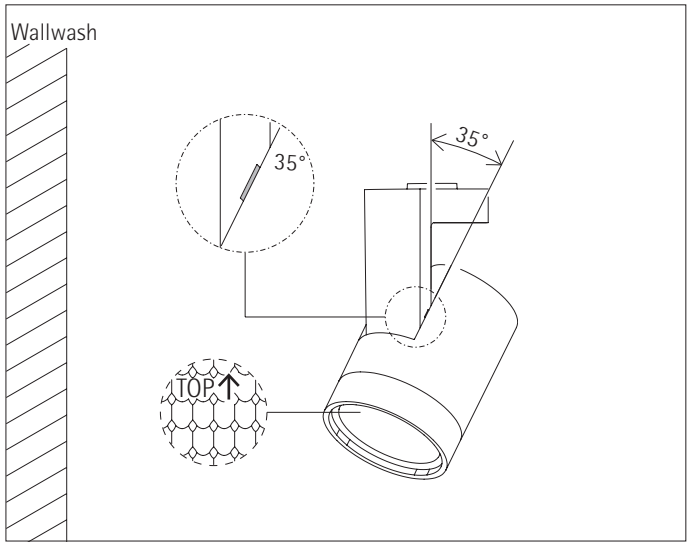

## Rotate light distribution

Zoom oval

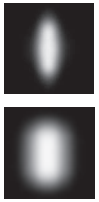

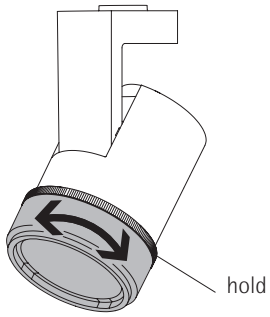


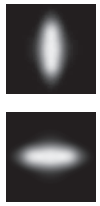

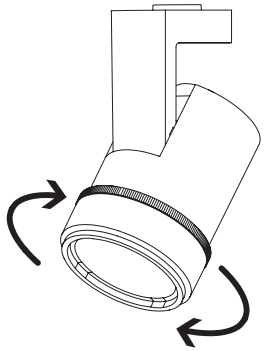

Zoom spot

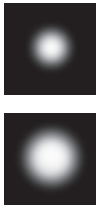

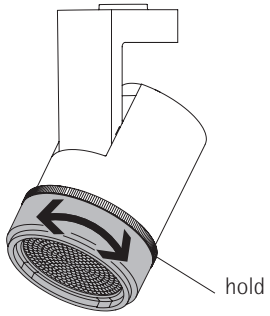


## Contour spotlight

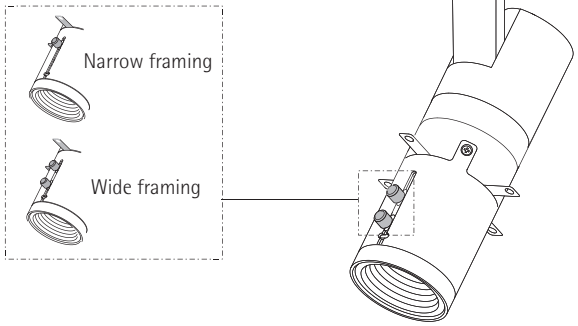

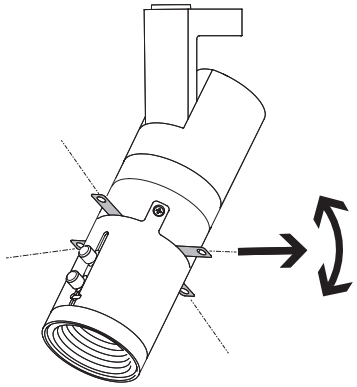

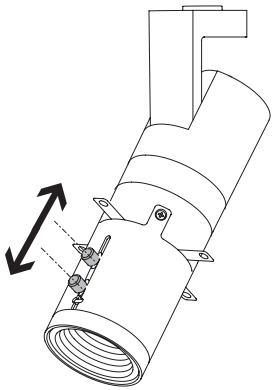

## Contour spotlight

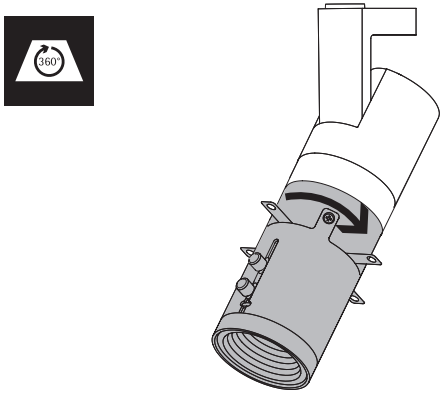

Optional

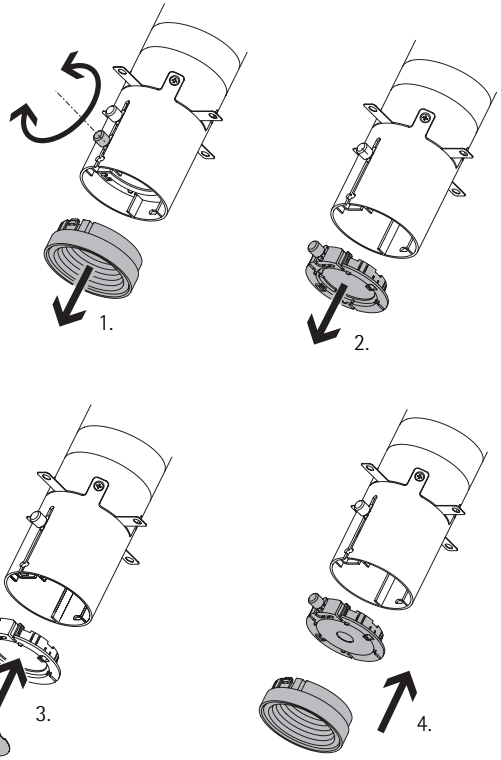

## Accessories

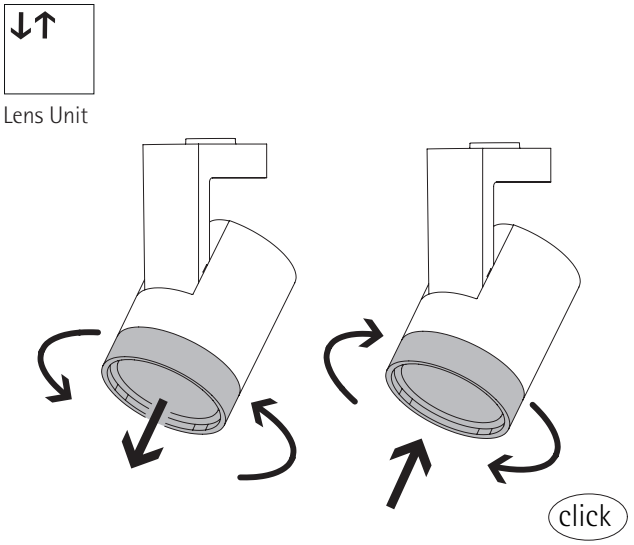


## Accessories

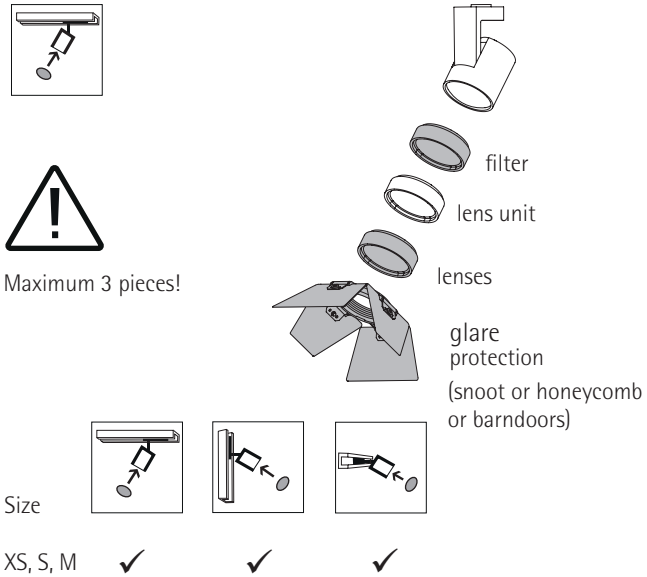


## Accessories

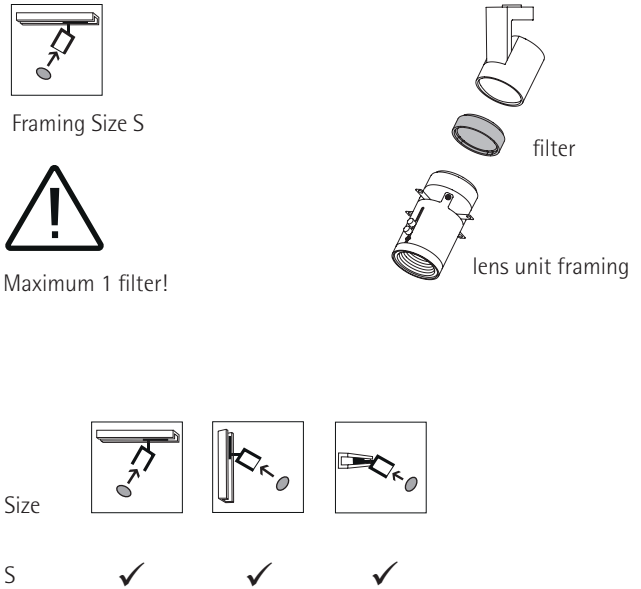


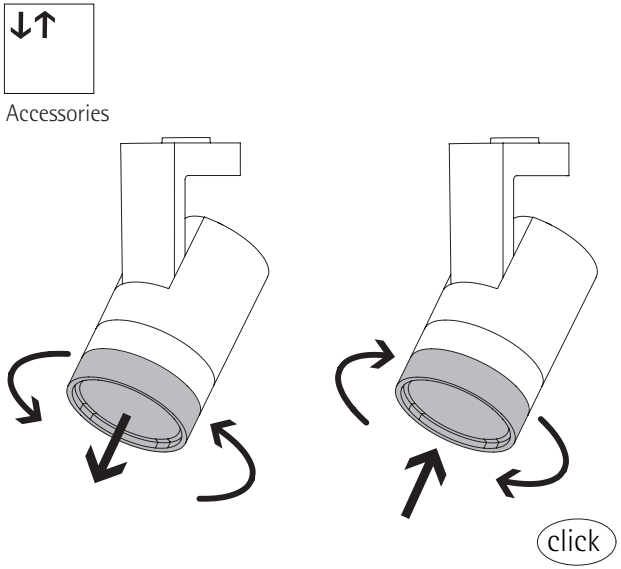


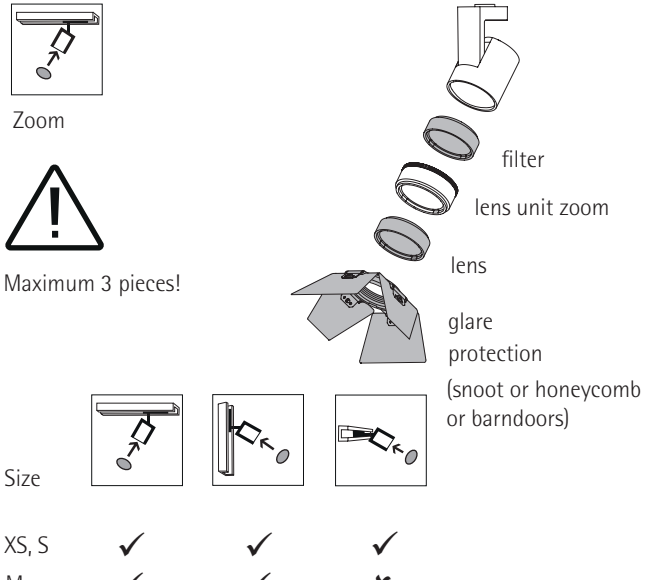


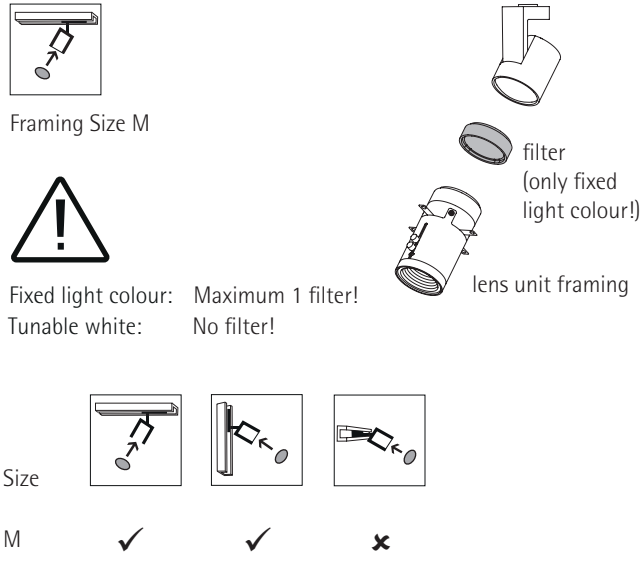

## English

Follow all enclosed instructions during installation.

Restrictions
*Wall mounting*
When mounting in horizontally or vertically mounted track, the maximum weights (including accessories) specified in the drawings must not be exceeded.
*Luminaire, size M, with On-board Dim*
Dimming with external dimmers is not possible.

Contour spotlights
For sharp edges you can fit the included aperture.